REV	ECO NO.	DESCRIPTION

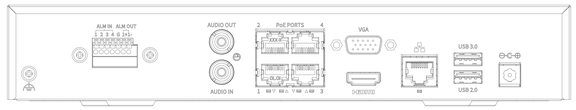

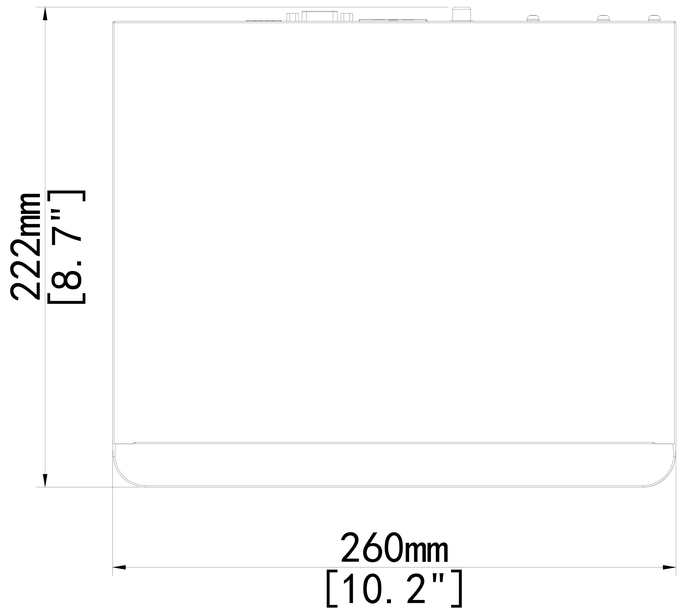

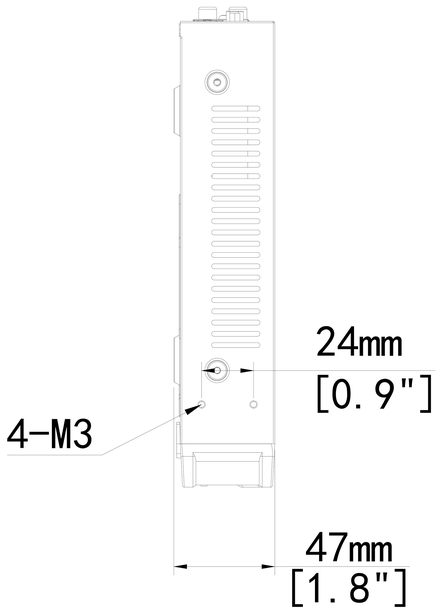

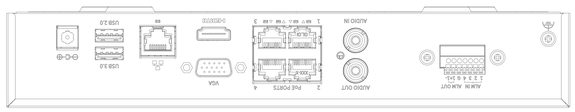

DRAW:	DATE:	TITLE:	
CHKD:	DATE:	UNIT'S mm(inch)	DWG NO.:
STAD:	DATE:	FINISH:	
APPD:	DATE:	MASS(Kg):	PART NO.: REV
PRODUCT:		SCALE: 1:2	
		SHEET: | OF |	MAT'L:

RELEASE LEVEL:
FILE NAME:
A2